SYSTEM CONTROL SEQUENCES

PROVIDE AS DESCRIBED BELOW AN EXTENSION OF THE EXISTING FACILITY ENERGY MANAGEMENT SYSTEM. ALL NEW CONTROLS AND WIRING TO BE COMPLETELY COMPATIBLE WITH THE EXISTING SYSTEM, AND OF THE SAME MANUFACTURER.

BLOWER COIL UNITS

ALL BLOWER COIL UNITS SHALL BE CONTROLLED THROUGH A DDC UNITARY CONTROLLER ACCORDING TO SCHEDULE.

ALL BLOWER COIL UNITS SHALL HAVE 3-WAY VALVES FOR CONTROL OF HEATING AND COOLING. ON A CALL FOR HEATING OR COOLING, THESE VALVES SHALL MODULATE TO CONTROL THE WATER FLOW THROUGH THE UNIT COILS TO SATISFY THE ZONE REQUIREMENTS FOR HEATING OR COOLING.

DURING UNOCCUPIED OR HOLIDAY SCHEDULES, THE OUTSIDE AIR INTAKE DAMPER (WHERE REQUIRED) OF ALL UNITS SHALL REMAIN CLOSED. ADDITIONALLY, ALL OUTSIDE AIR INTAKE DAMPERS SHALL FAIL TO THE CLOSED POSITION. ALL DAMPER OPERATORS SHALL BE SPRING RETURN.

DURING MORNING WARM UP OR COOL DOWN CYCLES, THE OUTSIDE AIR INTAKE DAMPER OF EACH UNIT SHALL REMAIN IN THE CLOSED POSITION UNTIL THE DESIRED SPACE TEMPERATURE SETPOINT IS ACHIEVED. ONCE THE DDC SYSTEM INITIATES THE OCCUPIED SCHEDULE, THE OUTSIDE AIR INTAKE DAMPERS SHALL OPEN AS REQUIRED TO PROVIDE THE QUANTITIES OF FRESH AIR AS SHOWN IN THE EQUIPMENT SCHEDULES.

THE UNITS SHALL BE FURNISHED WITH LIFE SAFETY DEVICES AS CALLED FOR ON THE DRAWINGS AND SPECIFICATIONS. THE UNIT SHALL ALSO BE FURNISHED WITH A LOW LIMIT FREEZESTAT ON THE COIL. IN THE EVENT THE COIL TEMPERATURE DROPS TO 40° F, THEN THE UNIT SHALL BE DISABLED AND THE OUTSIDE AIR DAMPER SHUT.

EACH UNIT SHALL HAVE A ZONE MOUNTED SMART SENSOR WITH TIMED OVERRIDE FOR CONTROL.

DDC CONTROL POINTS:
FAN START/STOP
FAN STATUS (DIFF. PRESSURE)
OUTSIDE AIR INTAKE DAMPER MODULATE (AS REQUIRED)
MIXED AIR TEMPERATURE
OUTSIDE AIR TEMPERATURE
DISCHARGE TEMPERATURE
SPACE TEMPERATURE
UNIT OVERRIDE
OUTSIDE AIR INTAKE DAMPER POSITION (AS REQUIRED)
FREEZESTAT STATUS
FIRESTAT OR SMOKE DETECTOR STATUS
CHILLED WATER VALVE POSITION
CHILLED WATER VALVE MODULATE
HOT WATER VALVE POSITION
HOT WATER VALVE MODULATE

UNIT VENTILATORS – 4 PIPE

EACH UNIT VENTILATOR SHALL HAVE A DDC CONTROLLER WITH A ZONE MOUNTED SMART SENSOR WITH TIMED OVERRIDE. THE CONTROLLER WILL MODULATE THE INDIVIDUAL UNIT HOT AND CHILLED WATER VALVES TO MAINTAIN THE DESIRED ZONE TEMPERATURE. THE OA DAMPER AND RETURN AIR DAMPERS WILL BE MODULATED IN ACCORDANCE WITH ASHRAE CYCLE II. THE FAN WILL RUN CONTINUOUSLY IN THE OCCUPIED MODE (UNLESS SWITCHED OFF BY THE REMOTE MOUNTED FAN SPEED SWITCH) AND WILL CYCLE ON A CALL FOR HEATING OR COOLING IN THE UNOCCUPIED MODE. IN THE UNOCCUPIED MODE THE OA DAMPERS WILL BE 100% CLOSED AND WILL REMAIN IN THAT POSITION DURING MORNING WARM- UP (WINTER) OR COOL DOWN (SUMMER). ONCE THE FACILITY IS OCCUPIED, THE OA DAMPER WILL OPEN TO THE MINIMUM OUTSIDE AIR INTAKE POSITION. EACH UV WILL BE EQUIPPED WITH A FREEZESTAT TO PRECLUDE FREEZING OF THE COILS. OUTSIDE AIR DAMPERS SHALL HAVE ELECTRIC OPERATORS WITH SPRING RETURN. AT ANY TIME THE UNIT FAN IS OFF, THE OUTSIDE AIR INTAKE DAMPER SHALL BE COMPLETELY CLOSED. WHEN THE UNITS ARE IN WINTER MODE, PROOF OF WATER FLOW AND HOT WATER AVAILABLE SHALL BE ACCOMPLISHED BEFORE UNIT VENTILATOR SHALL BE ALLOWED TO START.

DDC CONTROL POINTS:
FAN START/STOP
FAN STATUS (CT RELAY)
OUTSIDE AIR/RETURN AIR DAMPER MODULATE
OUTSIDE AIR/RETURN AIR DAMPER POSITION
FREEZE STAT STATUS
SPACE TEMPERATURE
SPACE TEMPERATURE OVERRIDE
DISCHARGE AIR TEMPERATURE
OUTSIDE AIR TEMPERATURE
MIXED AIR TEMPERATURE
RETURN WATER TEMPERATURE
SUPPLY WATER TEMPERATURE
CHILLED WATER VALVE POSITION
CHILLED WATER VALVE MODULATE
HOT WATER VALVE POSITION
HOT WATER VALVE MODULATE

PIPING LEGEND

SYMBOL	DESCRIPTION
	BALL VALVE
	GATE VALVE
	COMBINATION BALANCING & CUTOFF VALVE
	STRAINER
	TEMPERATURE & PRESSURE WELL
	FLANGED CONNECTION
	UNION
	TEMPERATURE & PRESSURE RELIEF VALVE
	CHECK VALVE
HWS	NEW HOT WATER SUPPLY
HWR	NEW HOT WATER RETURN
EHWS	EXISTING HOT WATER SUPPLY
EHWR	EXISTING HOT WATER RETURN
CWS	NEW CHILLED WATER SUPPLY
CWR	NEW CHILLED WATER RETURN
ECWS	EXISTING CHILLED WATER SUPPLY
ECWR	EXISTING CHILLED WATER RETURN
	DIRECTION OF FLOW

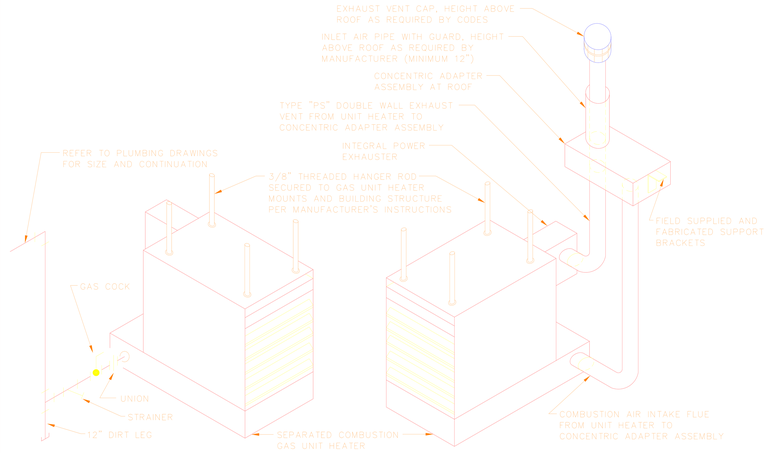

GAS UNIT HEATER INSTALLATION DETAILS

NOT TO SCALE

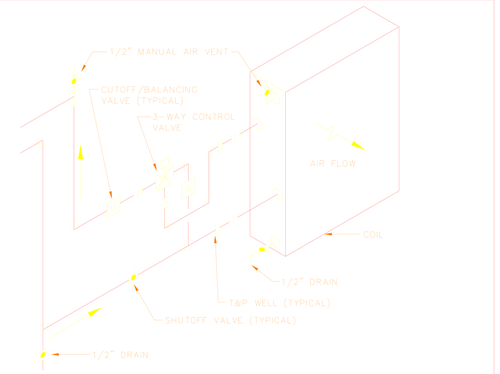

3-WAY CONTROL VALVE AND HOT WATER COIL PIPING DETAIL

NOT TO SCALE

NOTES:

1. PIPE ALL HOT WATER COILS COUNTER FLOW.
2. NOT ALL UNITS WILL REQUIRE A 3-WAY CONTROL VALVE. REFER TO EQUIPMENT SCHEDULES TO DETERMINE WHICH UNITS WILL REQUIRE 3-WAY VALVES.

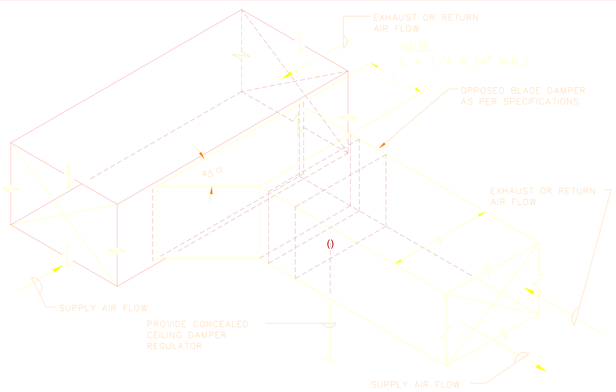

LOW PRESSURE BRANCH DUCT TAKE-OFF AT MAIN TRUNK

NOT TO SCALE

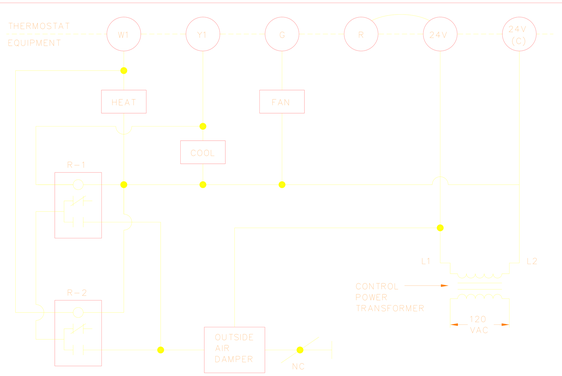

GAS FURNACE OUTSIDE AIR INTAKE DAMPER CONTROL SCHEMATIC

NOT TO SCALE

NOTES:

1. R-1 AND R-2 ARE 24VAC SPST RELAYS.
2. OUTSIDE AIR DAMPER MOTOR IS 24VAC SPRING RETURN.
3. CONTROL TRANSFORMER MUST BE SIZED TO CARRY THE ADDITIONAL LOAD OF THE OUTSIDE AIR DAMPER MOTOR, OR A SEPARATE TRANSFORMER MUST BE USED FOR THE DAMPER MOTOR.

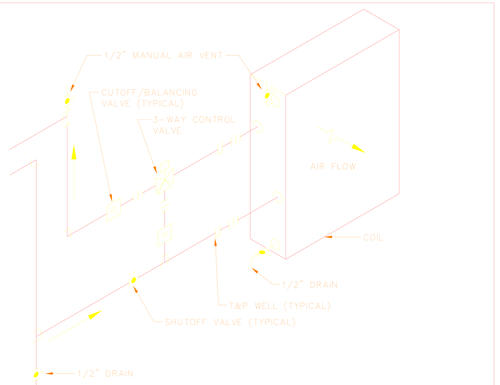

3-WAY CONTROL VALVE AND CHILLED WATER COIL PIPING DETAIL

NOT TO SCALE

NOTES:

1. PIPE ALL CHILLED WATER COILS COUNTER FLOW.
2. NOT ALL UNITS WILL REQUIRE A 3-WAY CONTROL VALVE. REFER TO EQUIPMENT SCHEDULES TO DETERMINE WHICH UNITS WILL REQUIRE 3-WAY VALVES.

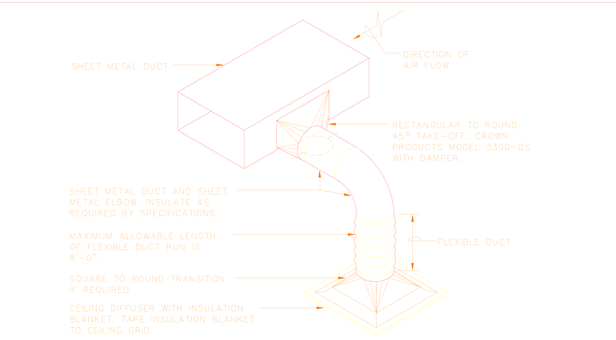

NOTE:
WHERE CEILING RADIATION DAMPERS AND CEILING RADIATION BLANKETS ARE REQUIRED, INSTALL RADIATION BLANKET BENEATH INSULATION BLANKET, AND TAPE INSULATION BLANKET TO CEILING GRID. RADIATION BLANKETS ARE NOT A SUBSTITUTE FOR INSULATION BLANKETS.

LOW PRESSURE DUCT TAKE-OFF AT SHEET METAL DUCT DETAIL

NOT TO SCALE

SINGLE LINE DUCT LEGEND AND SYMBOLS

- S — EXISTING SENSOR
- T — WALL THERMOSTAT
- T — EXISTING WALL THERMOSTAT
- SUPPLY DIFFUSER
- RETURN REGISTER OR GRILLE
- POINT OF NEW CONNECTION TO EXISTING
- T — THERMOSTAT WITH WIRE CAGE GUARD

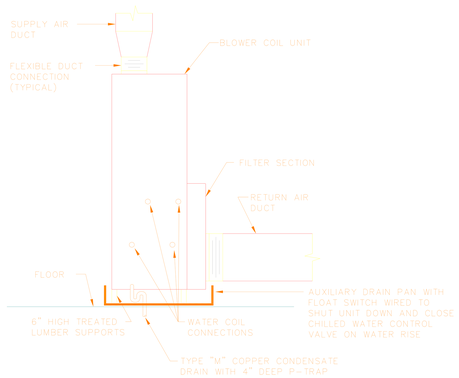

TYPICAL VERTICAL BLOWER COIL UNIT MOUNTING DETAIL

NOT TO SCALE

NOTES:

1. PROVIDE ALL UNIT ACCESS DOORS AND PIPING CONNECTIONS ON SAME SIDE OF UNIT. COORDINATE EXACT LOCATIONS REQUIRED PRIOR TO ROUGH-IN.
2. REFER TO COIL PIPING DETAILS AND EQUIPMENT SCHEDULES FOR PIPING AND VALVE REQUIREMENTS FOR ALL UNITS.

HANGER SIZES FOR RECTANGULAR DUCT

MAX. SIDE	HANGER	HORIZONTAL SUPPORT ANGLE	MAXIMUM SPACING
30"	1"x18" GAGE STRAP	NONE REQUIRED	10'-0"
36"	1/4" ROUND ROD	1-1/2"x1-1/2"x1/8"	8'-0"
48"	1/4" ROUND ROD	2"x2"x1/8"	8'-0"
60"	5/16" ROUND ROD	2"x2"x1/8"	8'-0"
84"	3/8" ROUND ROD	2"x2"x1/8"	8'-0"

NOTE:
ALL SUPPLY AIR DUCT SHALL BE WRAPPED EXTERNALLY AS PER SPECIFICATIONS.

NO POP RIVETS ALLOWED

SELF-TAPPING CADMIUM PLATED HEX HEAD SHEET METAL SCREW STRAPS TO BE TIGHT AGAINST DUCT.

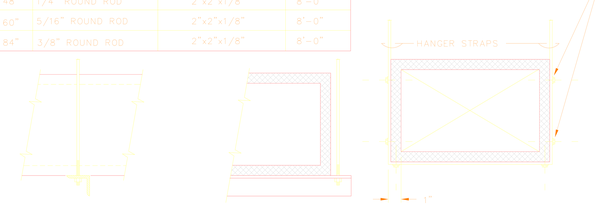

DUCT STRAP HANGER DETAIL

NOT TO SCALE

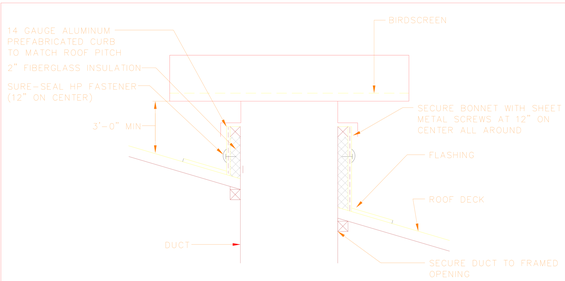

ROOF INTAKE DETAIL

NOT TO SCALE

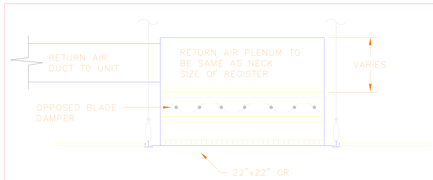

CEILING RETURN DETAIL

NOT TO SCALE

DETAILS - HVAC

M-5