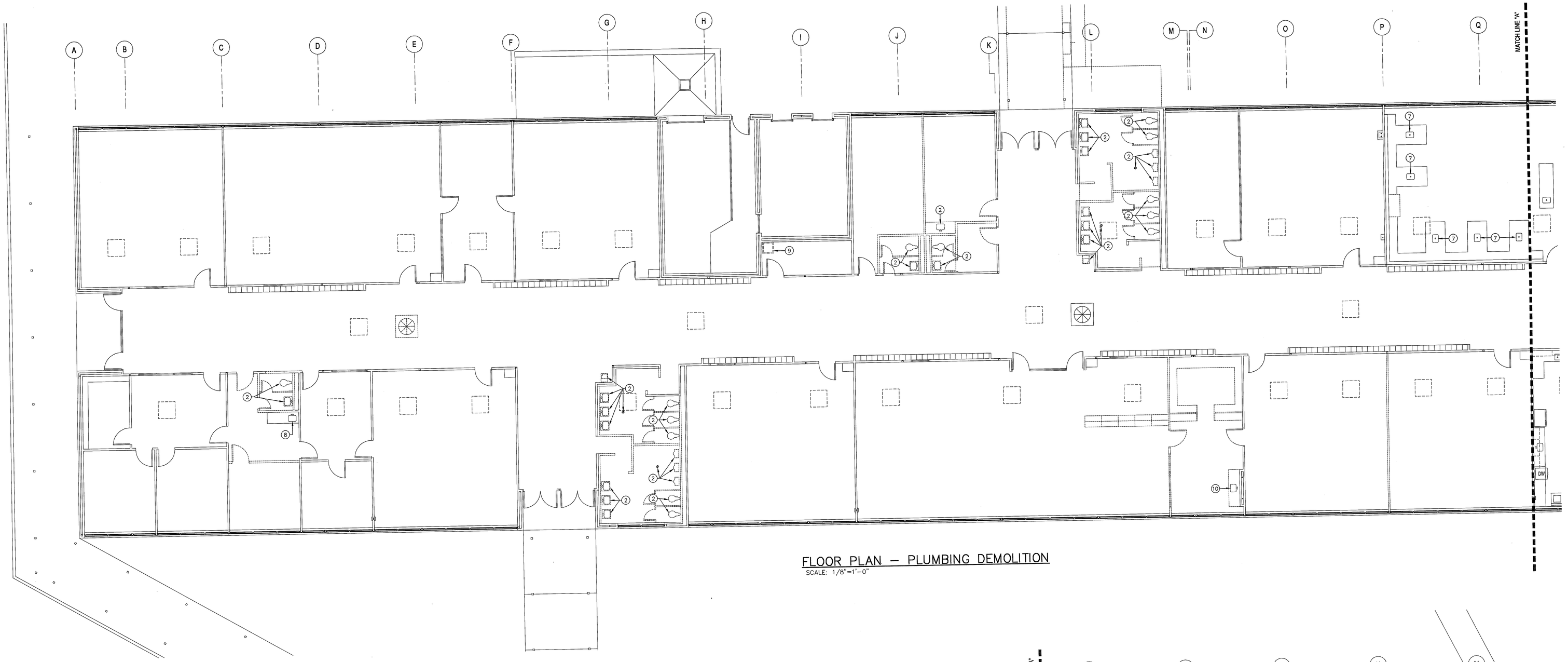

FLOOR PLAN – PLUMBING DEMOLITION
SCALE: 1/8"=1'-0"

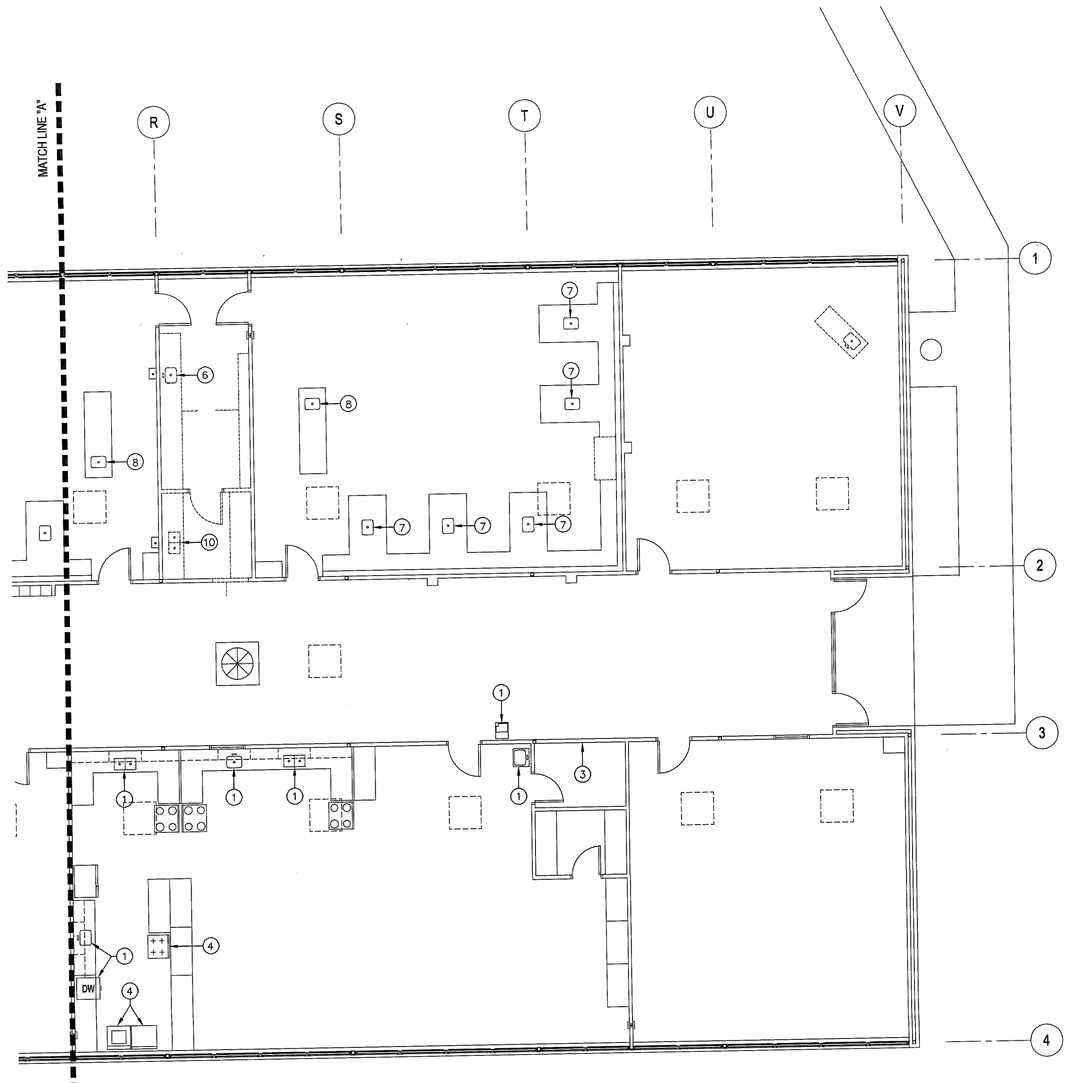

FLOOR PLAN – PLUMBING DEMOLITION
SCALE: 1/8"=1'-0"

DEMOLITION AND CONSTRUCTION NOTES

1. EXISTING FIXTURE TO REMAIN AS IS.
2. REMOVE EXISTING FIXTURE IN THIS LOCATION. REMOVE ALL EXIST. CONNECTING PIPING TO ALLOW FOR NEW PIPING AND FIXTURES. DISPOSE OF FIXTURE AS DIRECTED BY THE OWNER.
3. EXISTING SINK HAS ALREADY BEEN REMOVED. CAP-OFF EXISTING ROUGH-INS AS REQUIRED TO BE CONCEALED FROM VIEW.
4. EXISTING GAS RANGE & PIPING TO REMAIN AS IS.
5. EXISTING WASHER/DRYER & PIPING TO REMAIN AS IS.
6. EXIST. SINK INTHIS LOCATION BEING REMOVED. CONTRACTOR SHALL DISCONNECT EXIST. SERVICES FROM SINK BEING REMOVED. NEW SINK AND FAUCET SHALL BE FURNISHED AND INSTALLED BY SCIENCE EQUIPMENT SUPPLIER. CONTRACTOR SHALL PROVIDE NEW ANGLE SUPPLY AND STOPS ON EXIST. COLD WATER ROUGH-IN. CONTRACTOR SHALL INSTALL NEW HOT WATER PIPING AS INDICATED ON DRAWINGS AND TERMINATE BELOW SINK W/NEW ANGLE SUPPLY/STOP. FINAL CONNECTION OF HW, CW, AND WASTE SHALL BE BY SCIENCE EQUIPMENT CONTRACTOR.
7. EXIST. SCIENCE ROOM SINK TO REMAIN. SCIENCE EQUIPMENT SUPPLIER SHALL REPLACE EXIST. GAS COCK AND CW FAUCET W/NEW DOUBLE GAS COCK AND HOT/COLD WATER FAUCET. CONTRACTOR SHALL PROVIDE NEW ANGLE SUPPLY/STOP ON EXIST. COLD WATER ROUGH-IN. CONTRACTOR SHALL INSTALL NEW HOT WATER PIPING AS INDICATED ON DRAWINGS AND TERMINATE BELOW SINK W/ NEW ANGLE SUPPLY STOP. FINAL CONNECTION OF GAS, HW, CW, AND WASTE SHALL BE BY SCIENCE EQUIP. CONTRACTOR.
8. EXISTING SINK TO REMAIN. REPLACE EXISTING FAUCET, SUPPLIES, & P-TRAP WITH NEW AS DESIGNATED BY FIXTURE NUMBER. CONNECT NEW WASTE & WATER PIPING TO SINK AS SHOWN ON PLANS.
9. REMOVE EXISTING WALL HUNG JANITOR SINK. INSTALL NEW FLOOR BASIN JANITOR SINK AS DESIGNATED BY FIXTURE NUMBER. REWORK EXISTING ROUGH-INS AS REQUIRED TO ACCOMMODATE NEW SINK.
10. REMOVE EXIST. FIXTURE IN THIS LOCATION. CAP-OFF EXIST. ROUGH-INS INSIDE FINISHED WALL, ABOVE CEILING, OR BELOW FLOOR AS REQUIRED TO CONCEAL FROM VIEW.

ANDREWS HIGH SCHOOL
ADDITIONS AND RENOVATIONS
Andrews, North Carolina

NORTH CAROLINA PROFESSIONAL ENGINEER SEAL 24864 JEFFREY R. WHILLOCK 1/30/04

PADGETT & FREEMAN ARCHITECTS, P.A.
ARCHITECTURE PLANNING INTERIORS
30 Choctaw Street Asheville, NC 28801 828-254-1963

Drawing
BUILDING "A"
DEMOLITION FLOOR PLANS - PLUMBING

Date
JANUARY 30, 2004

Sheet
DP1
1 Of ?

ESG
ENGINEERING SERVICES GROUP - NORTH CAROLINA, P.C.
CONSULTING ENGINEERS
900 EAST HILL AVE. SUITE 350
KNOXVILLE, TENNESSEE 37915
(865) 522-0393
PROJECT NO. 24147

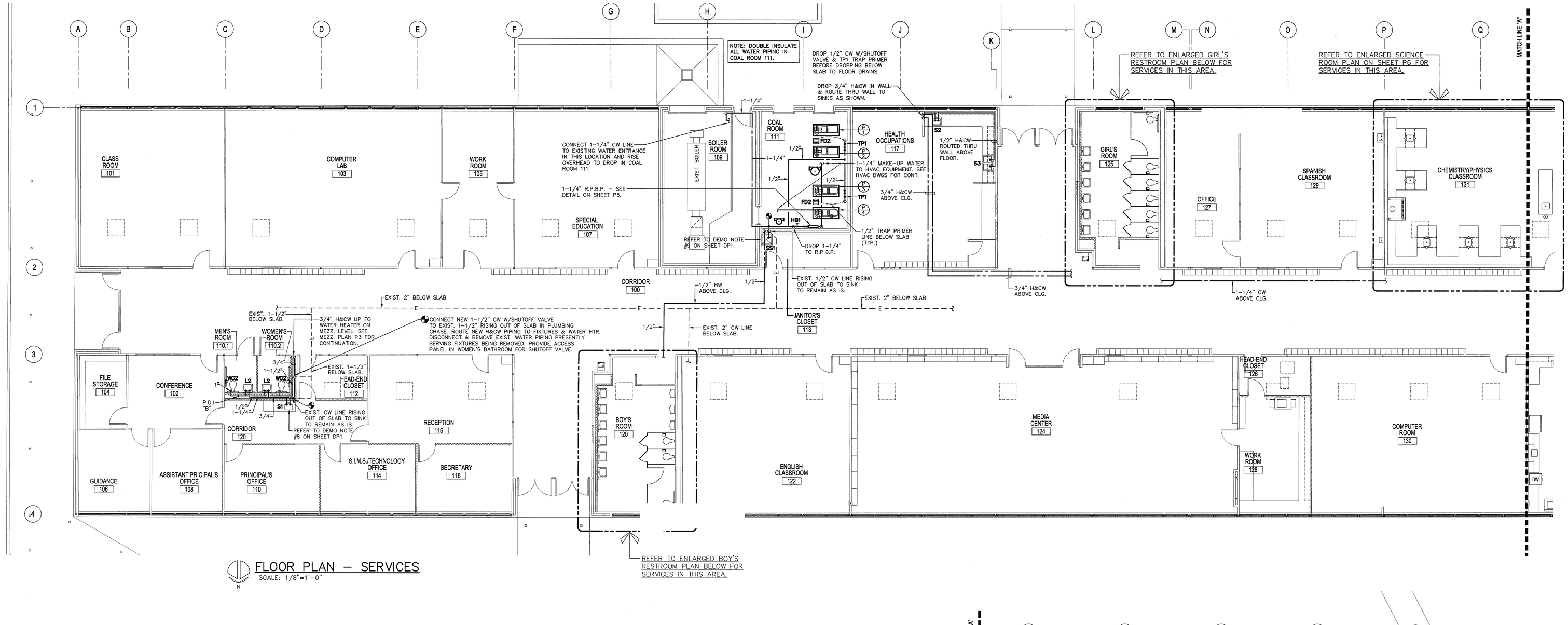

FLOOR PLAN – SERVICES
SCALE: 1/8"=1'-0"

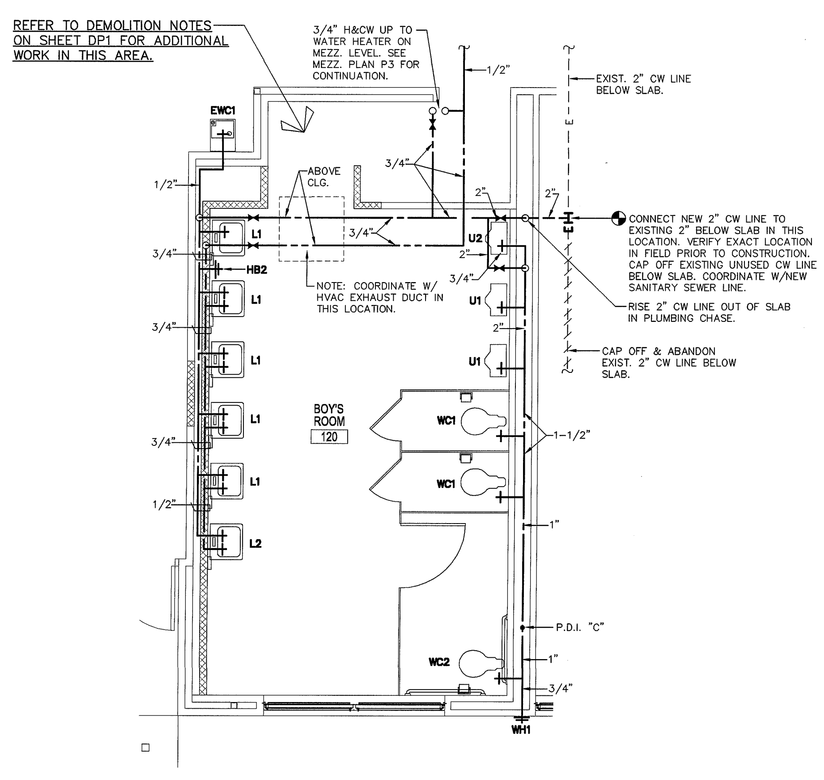

ENLARGED BOY'S ROOM 120
FLOOR PLAN – WASTE & VENT
SCALE: 1/4"=1'-0"

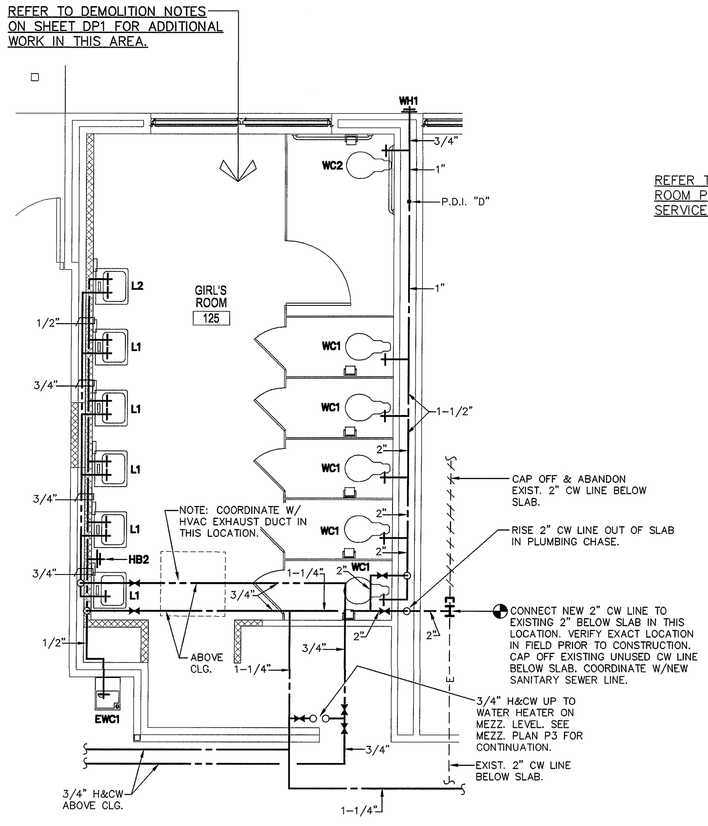

ENLARGED GIRL'S ROOM 125
FLOOR PLAN – WASTE & VENT
SCALE: 1/4"=1'-0"

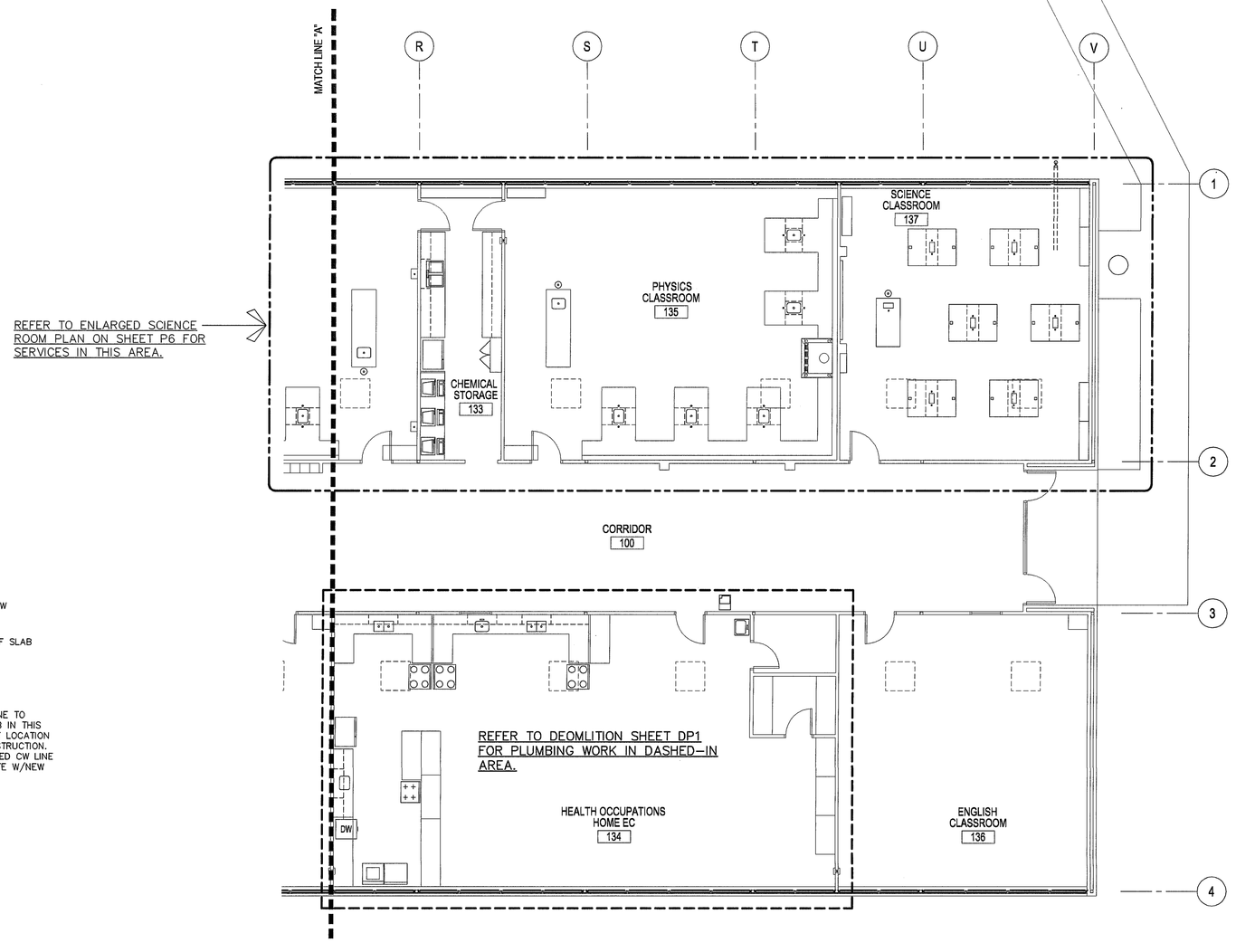

FLOOR PLAN – SERVICES
SCALE: 1/8"=1'-0"

ANDREWS HIGH SCHOOL
ADDITIONS AND RENOVATIONS
Andrews, North Carolina

NORTH CAROLINA REGISTERED PROFESSIONAL ENGINEER JEFFREY R. WHITLOCK 024864

PADGETT & FREEMAN ARCHITECTS, P.A.
ARCHITECTURE PLANNING INTERIORS
30 Choctaw Street Asheville, NC 28801 828-254-1963

Drawing
BUILDING "A"
FLOOR PLANS
- SERVICES

Date
JANUARY 30, 2004

Sheet
P1

1 Of 7

ESG
ENGINEERING SERVICES GROUP - NORTH CAROLINA, P.C.
CONSULTING ENGINEERS
900 EAST HILL AVE. SUITE 350
KNOXVILLE, TENNESSEE 37915
(865) 522-0393
PROJECT NO. 24147

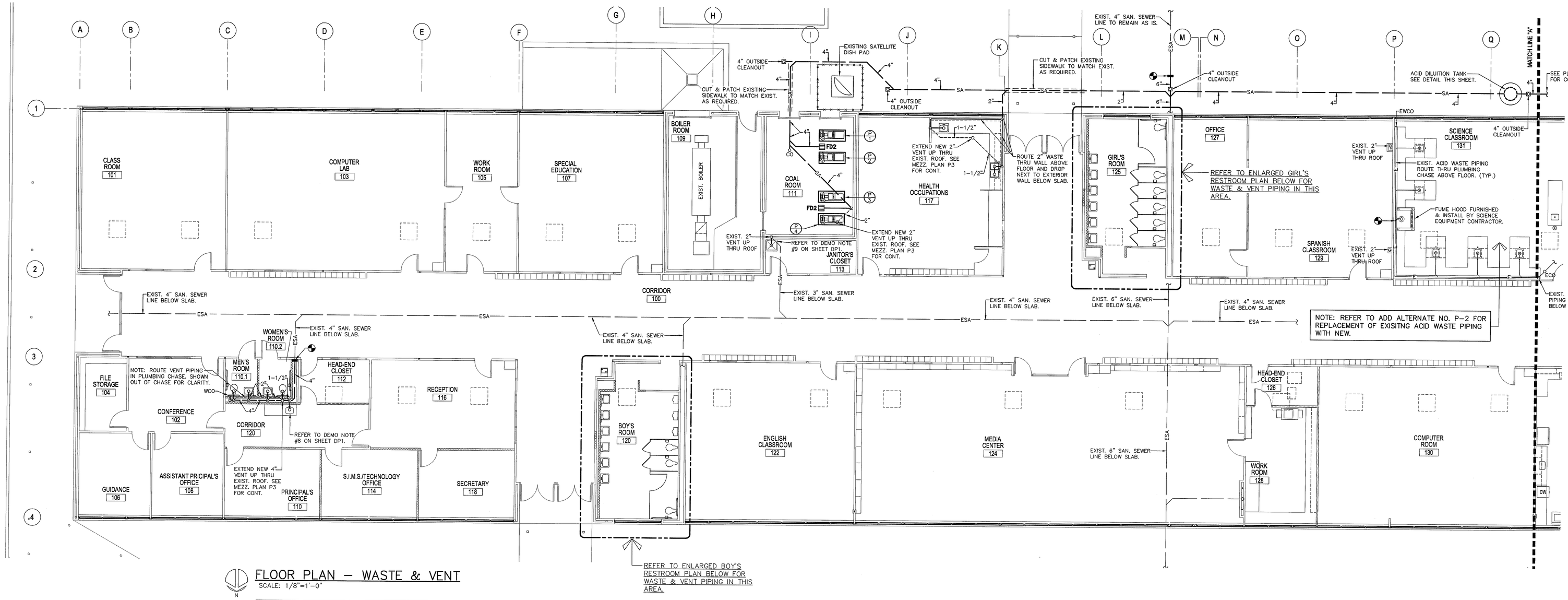

FLOOR PLAN – WASTE & VENT
SCALE: 1/8"=1'-0"

LAB NOTES:

1. SINKS, HOT AND COLD WATER FAUCETS W/DOUBLE GAS COCK, EMER. SHOWER W/MIXING VALVE, FUME HOODS, ACID RESISTANT P-TRAPS, AIR OUTLETS, AND EYEWASHES FURNISHED AND INSTALLED BY SCIENCE EQUIPMENT CONTRACTOR.
2. GAS PIPING DROPPING IN WALLS SHALL BE TYPE 'L' COPPER PIPING WITH SOLDER SWEAT FITTINGS.
3. CONTRACTOR'S RESPONSIBILTY TO VENTILATE ALL GAS PIPING IN BLOCK WALLS.
4. ALL ROUGH-INS SHALL BE IN ACCORDANCE WITH MANUFACTURER'S SHOP DWGS.

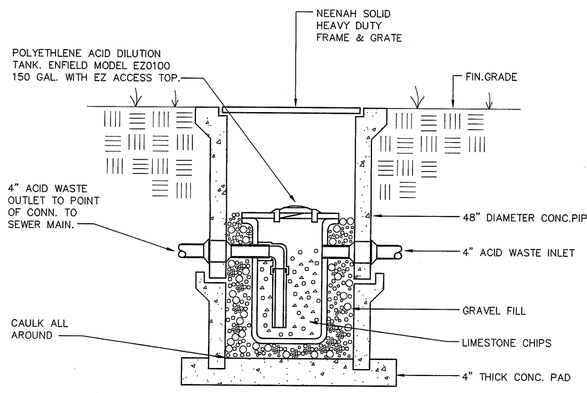

ACID DILUTION TANK
NOT TO SCALE

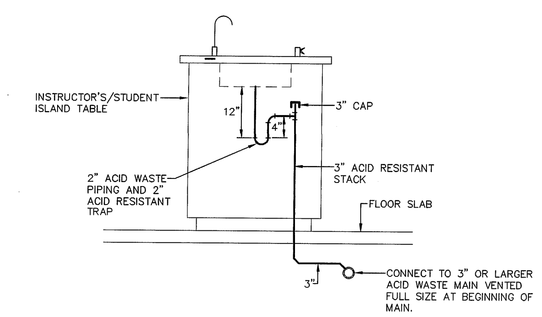

ISLAND INSTALLATION DETAIL
N.T.S.

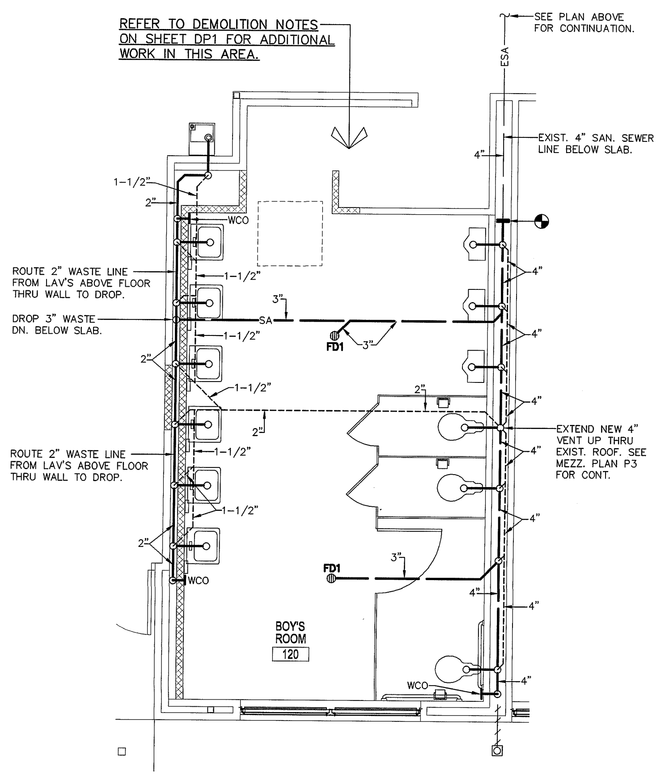

ENLARGED BOY'S ROOM 120 FLOOR PLAN – WASTE & VENT
SCALE: 1/4"=1'-0"

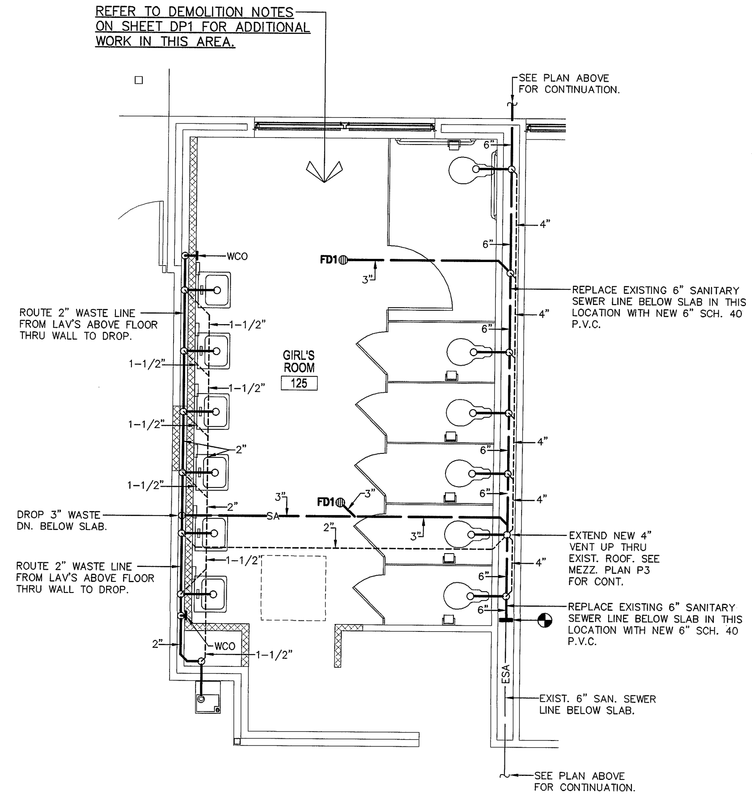

ENLARGED GIRL'S ROOM 125 FLOOR PLAN – WASTE & VENT
SCALE: 1/4"=1'-0"

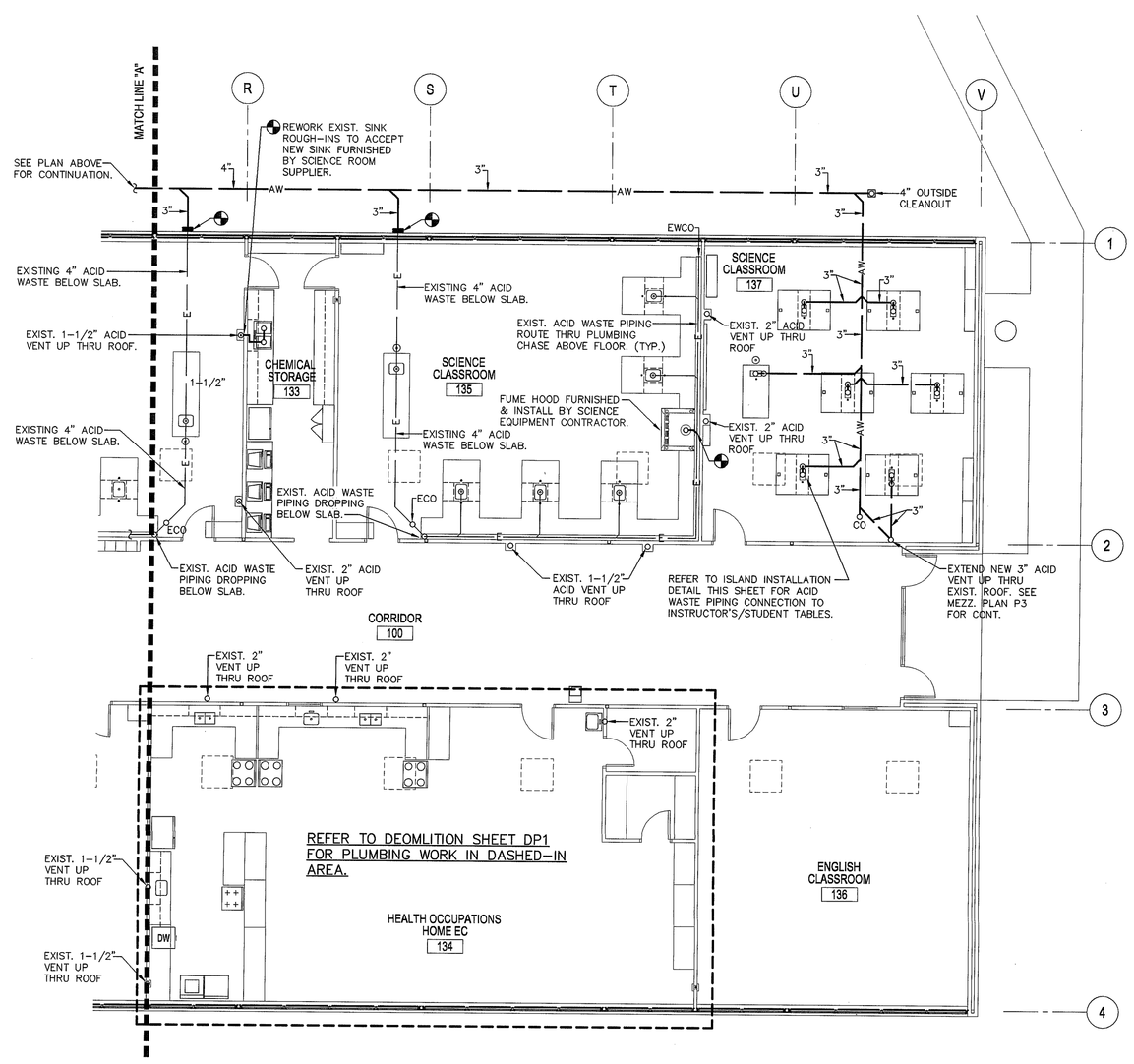

FLOOR PLAN – WASTE & VENT
SCALE: 1/8"=1'-0"

NOTE: REFER TO ADD ALTERNATE NO. P-2 FOR REPLACEMENT OF EXISITNG ACID WASTE PIPING WITH NEW.

ANDREWS HIGH SCHOOL
ADDITIONS AND RENOVATIONS
Andrews, North Carolina

NORTH CAROLINA PROFESSIONAL ENGINEER JEFFREY R. WHITLOW 19878

PADGETT & FREEMAN ARCHITECTS, P.A.
ARCHITECTURE PLANNING INTERIORS
30 Choctaw Street Asheville, NC 28801 828-254-1963

Drawing
BUILDING "A"
FLOOR PLANS
- W & V

Date
JANUARY 30, 2004

Sheet
P2

1 Of ?

ESG
ENGINEERING SERVICES GROUP-NORTH CAROLINA, P.C.
CONSULTING ENGINEERS
900 EAST HILL AVE. SUITE 350
KNOXVILLE, TENNESSEE 37915
(865) 522-0393
PROJECT NO. 24147

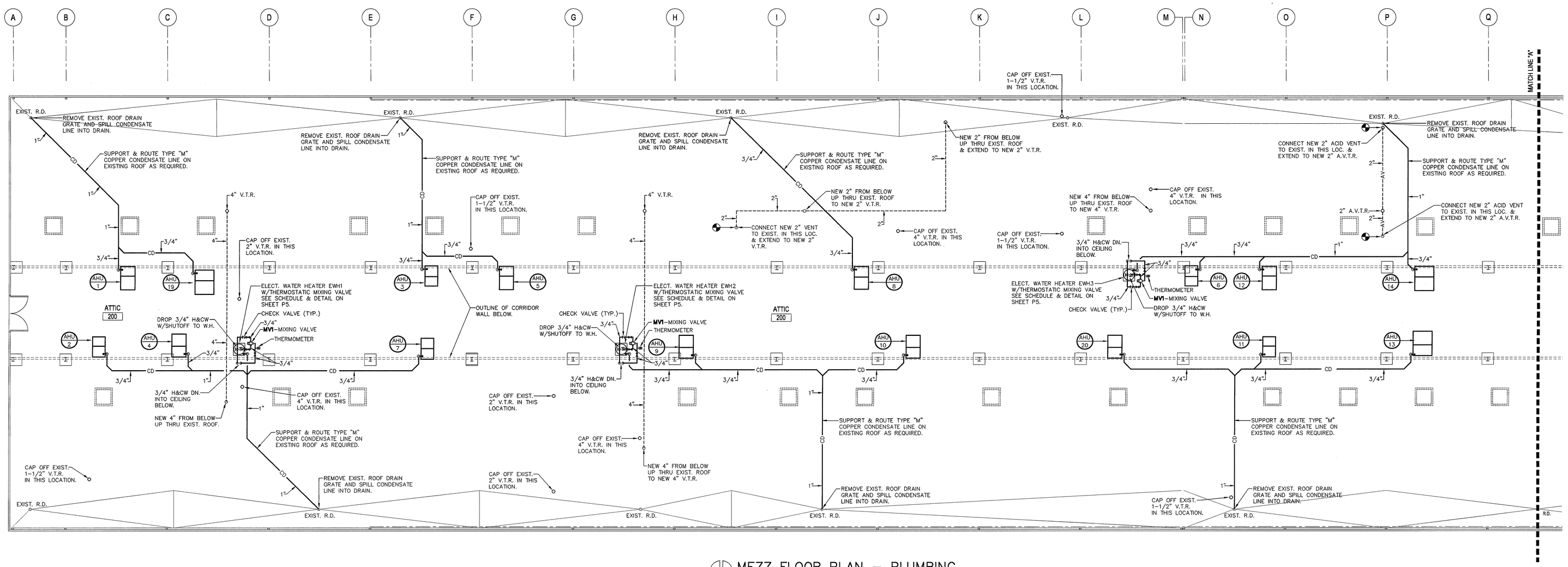

NOTE: ALL EXISTING AND NEW VENTS THRU ROOF AS SHOWN SHALL BE EXTENED UP THRU NEW PITCHED METAL ROOF ON THE SOUTH SIDE OF ROOF RIDGE. CAP OFF ALL UNUSED EXISTING V.T.R.'S ABOVE EXISTING ROOF.

MEZZ FLOOR PLAN – PLUMBING

SCALE: 1/8"=1'-0"

NOTE: ALL VENTS HAVE BEEN ROUTED TO REAR OF RIDGE LINE.

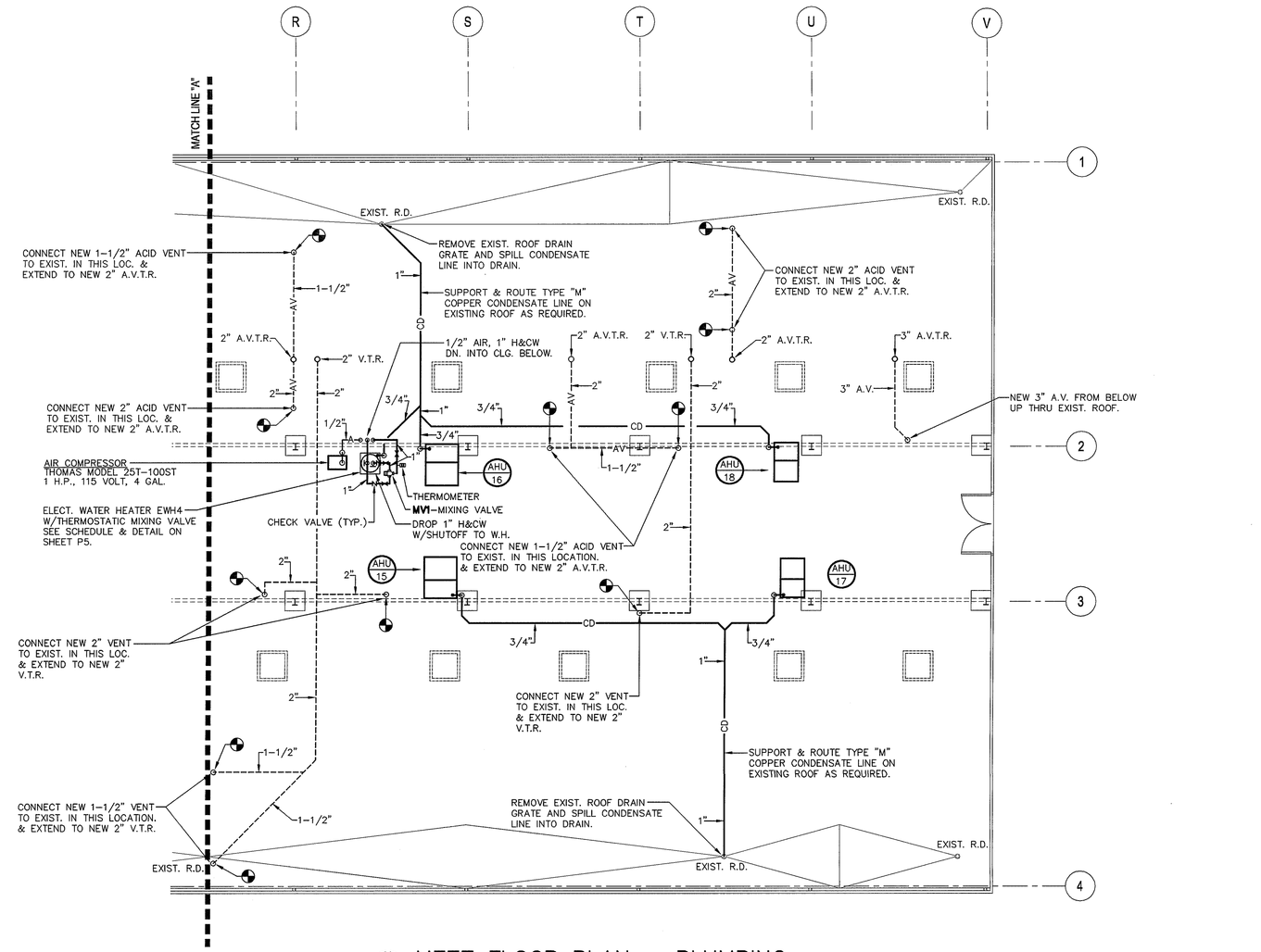

MEZZ FLOOR PLAN – PLUMBING

SCALE: 1/8"=1'-0"

NOTE: ALL VENTS HAVE BEEN ROUTED TO REAR OF RIDGE LINE.

ENGINEERING SERVICES GROUP - NORTH CAROLINA, P.C.
CONSULTING ENGINEERS
900 EAST HILL AVE. SUITE 350
KNOXVILLE, TENNESSEE 37915
(865) 922-0393
PROJECT NO. 24147

ANDREWS HIGH SCHOOL
ADDITIONS AND RENOVATIONS

Andrews, North Carolina

NORTH CAROLINA PROFESSIONAL ENGINEER SEAL JEFFREY R. WILLOCK

PADGETT & FREEMAN ARCHITECTS, P.A.
ARCHITECTURE PLANNING INTERIORS
30 Choctaw Street Asheville, NC 28801 828-254-1963

Drawing
BUILDING "A"
MEZZ FLOOR
PLANS-PLUMBING

Date
JANUARY 30, 2004

Sheet
P3

Of

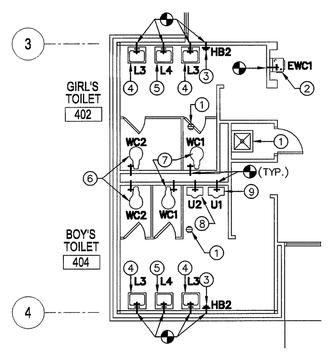

ADD ALTERNATE P-1 – PARTIAL PLAN – SERVICES
SCALE: 1/8"=1'-0"

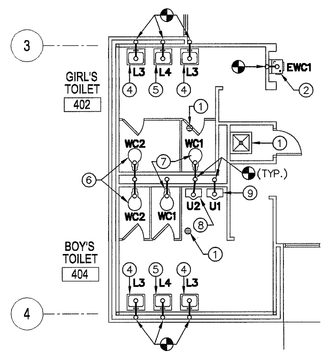

ADD ALTERNATE P-1 – PARTIAL PLAN – WASTE & VENT
SCALE: 1/8"=1'-0"

ADD ALTERNATE P-1 DEMOLITION AND CONSTRUCTION NOTES

1. EXISTING PLUMBING FIXTURE TO REMAIN AS IS.
2. REPLACE EXISTING ELECT. WATER COOLER IN THIS LOCATION WITH A NEW ELECTRICAL WATER COOLER AS DESIGNATED BY FIXTURE NUMBER. REWORK EXISTING ROUGH-INS AS REQUIRED TO ACCOMMODATE NEW E.W.C. MOUNTED AT 34" FROM CENTERLINE OF SPOUT TO FINISHED FLOOR. PROVIDE NEW WALL BRACKET AS REQUIRED.
3. REPLACE EXISTING HOSE BIBB IN THIS LOCATION WITH A NEW HOSE BIBB AS DESIGNATED BY FIXTURE NUMBER. REWORK EXISTING COLD WATER ROUGH-IN AS REQUIRED TO ACCOMMODATE NEW HOSE BIBB.
4. REPLACE EXISTING LAVATORY IN THIS LOCATION WITH A NEW LAVATORY AS DESIGNATED BY FIXTURE NUMBER. REWORK EXISTING ROUGH-INS AS REQUIRED TO ACCOMMODATE NEW LAVATORY. PROVIDE NEW WALL BRACKET AS REQUIRED.
5. REPLACE EXISTING (HANDICAP) LAVATORY IN THIS LOCATION WITH A NEW (HANDICAP) LAVATORY AS DESIGNATED BY FIXTURE NUMBER. REWORK EXISTING ROUGH-INS AS REQUIRED TO ACCOMMODATE NEW LAVATORY MOUNTED AT 34" FROM TOP OF BASIN TO FINISHED FLOOR. PROVIDE NEW WALL BRACKET AS REQUIRED.
6. REPLACE EXISTING WATER CLOSET IN THIS LOCATION WITH A NEW (HANDICAP) WATER CLOSET AS DESIGNATED BY FIXTURE NUMBER. REWORK EXISTING ROUGH-INS AS REQUIRED TO ACCOMMODATE NEW (HANDICAP) WATER CLOSET 18" CENTERLINE OF W.C. FROM SIDEWALL.
7. REPLACE EXISTING WATER CLOSET IN THIS LOCATION WITH A NEW WATER CLOSET AS DESIGNATED BY FIXTURE NUMBER. REWORK EXISTING ROUGH-INS AS REQUIRED TO ACCOMMODATE NEW WATER CLOSET.
8. REPLACE EXISTING (HANDICAP) URINAL IN THIS LOCATION WITH NEW (HANDICAP) URINAL AS DESIGNATED BY FIXTURE NUMBER. REWORK EXISTING ROUGH-INS AS REQUIRED TO ACCOMMODATE NEW (HANDICAP) URINAL MOUNTED 17" FROM TOP OF EXTEND LIP TO FINISHED FLOOR.
9. REPLACE EXISTING URINAL IN THIS LOCATION WITH NEW URINAL AS DESIGNATED BY FIXTURE NUMBER. REWORK EXISTING ROUGH-INS AS REQUIRED TO ACCOMMODATE NEW URINAL.

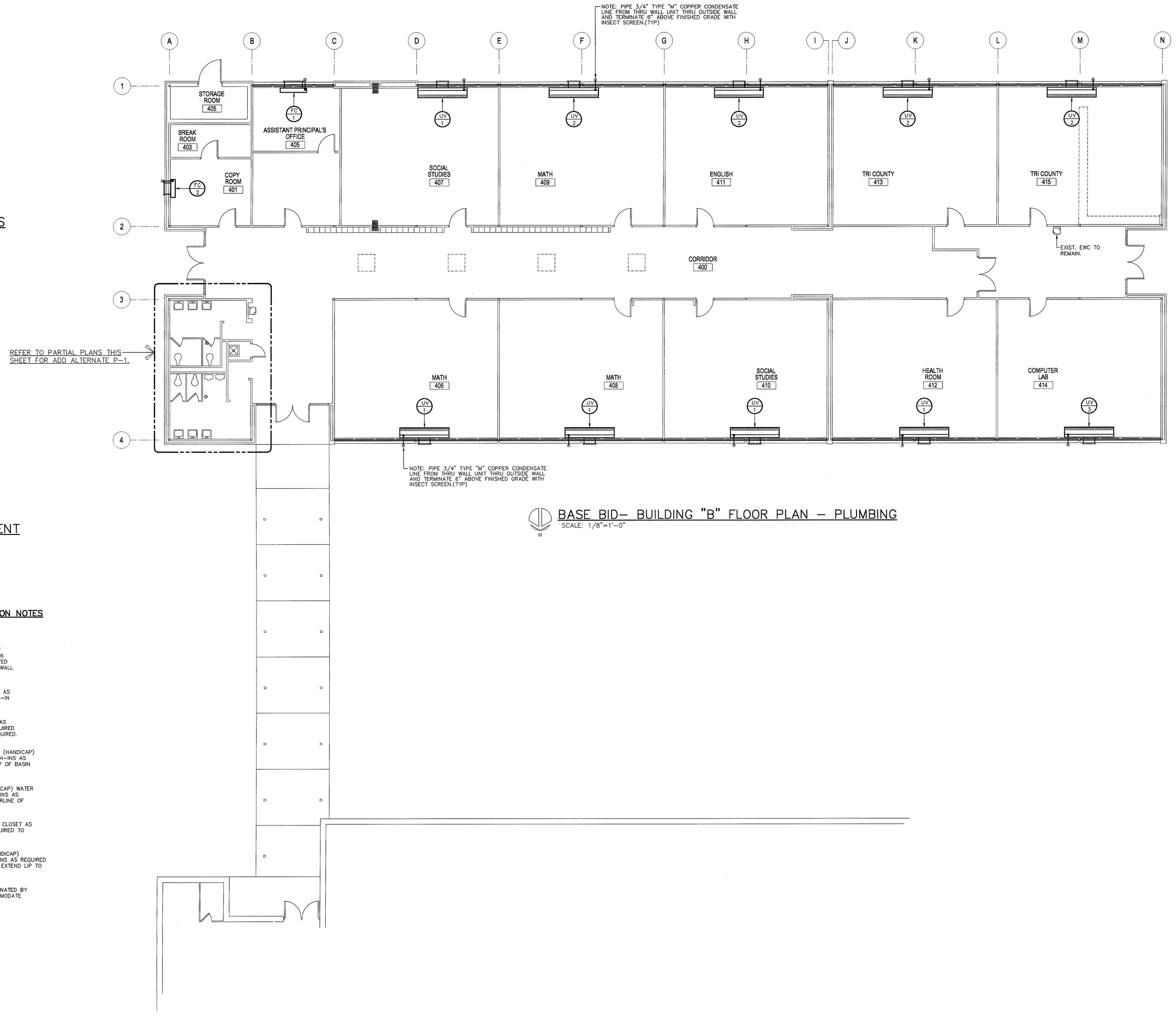

BASE BID– BUILDING "B" FLOOR PLAN – PLUMBING
SCALE: 1/8"=1'-0"

ANDREWS HIGH SCHOOL
ADDITIONS AND RENOVATIONS
Andrews, North Carolina

NORTH CAROLINA PROFESSIONAL ENGINEER SEAL 024884 JEFFREY R. WHITLOCK 12-04

PADGETT & FREEMAN ARCHITECTS, P.A.
ARCHITECTURE PLANNING INTERIORS
30 Chocaw Street Asheville, NC 28801 828-254-1963

Drawing
BUILDING "B" FLOOR PLAN - PLUMBING

Date
JANUARY 30, 2004

Sheet
P4

1 Of 7

ESG
ENGINEERING SERVICES GROUP - NORTH CAROLINA, P.C.
CONSULTING ENGINEERS
900 EAST HILL AVE. SUITE 350
KNOXVILLE, TENNESSEE 37915
(865) 922-0393
PROJECT NO. 24147

WATER HEATER SCHEDULE

HEATER NO.	GAL. CAP.	GAS B.T.U. INPUT	VOLTAGE /KW	RECOVERY @ 100° RISE	MFR. & MODEL NO.	LOCATION	RECIRCULATION PUMP			MIXING VALVE	EXPANSION TANK
							H.P.	VOLTAGE	MFR. & MODEL #		
EWH1	30	---	208/1/4.5	18.45	LOCHINVAR ESJ030KK	ATTIC 200	---	---	---	SYMMONS 5-130	WESSELS MODEL NL 20 3.2 VOL., 10.6 DIA.X11.8H
EWH2	30	---	208/1/4.5	18.45	LOCHINVAR ESJ030KK	ATTIC 200	---	---	---	SYMMONS 5-130	WESSELS MODEL NL 20 3.2 VOL., 10.6 DIA.X11.8H
EWH3	30	---	208/1/4.5	18.45	LOCHINVAR ESJ030KK	ATTIC 200	---	---	---	SYMMONS 5-130	WESSELS MODEL NL 20 3.2 VOL., 10.6 DIA.X11.8H
EWH4	65	---	208/1/4.5	18.45	LOCHINVAR ETJ066KK	ATTIC 200	---	---	---	SYMMONS 5-140	WESSELS MODEL NL 30 4.8 VOL., 10.6 DIA.X16.2H

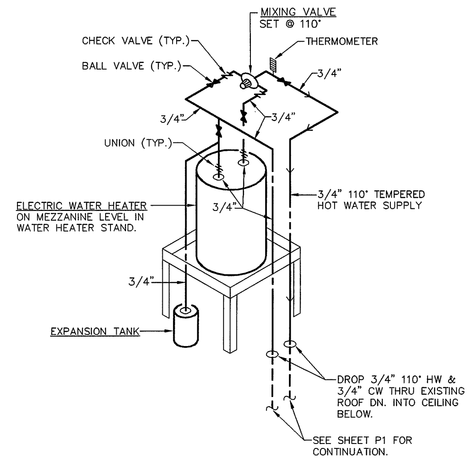

WATER HEATER PIPING SCHEMATIC

N.T.S. EWH1, EWH2, EWH3 AND EWH4

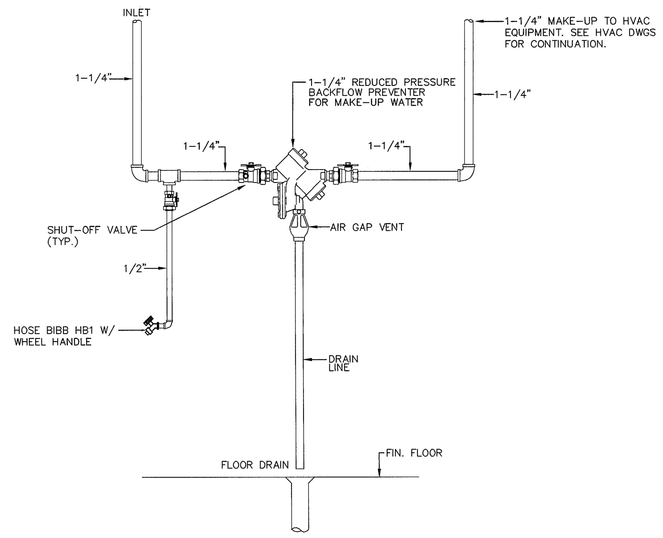

MAKE-UP WATER R.P.B.P. DETAIL

NOT TO SCALE

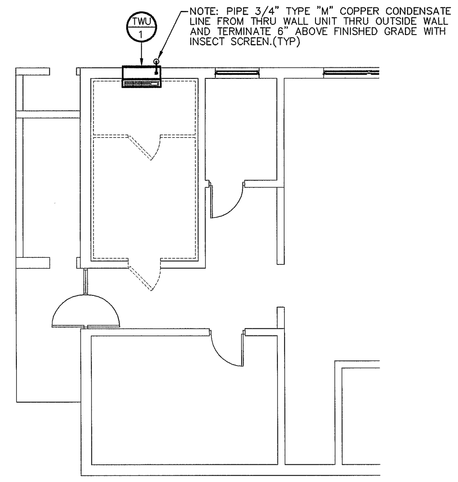

PARTIAL CAFETERIA/GYMNASIUM FLOOR PLAN – PLUMBING

SCALE: 1/8"=1'-0"

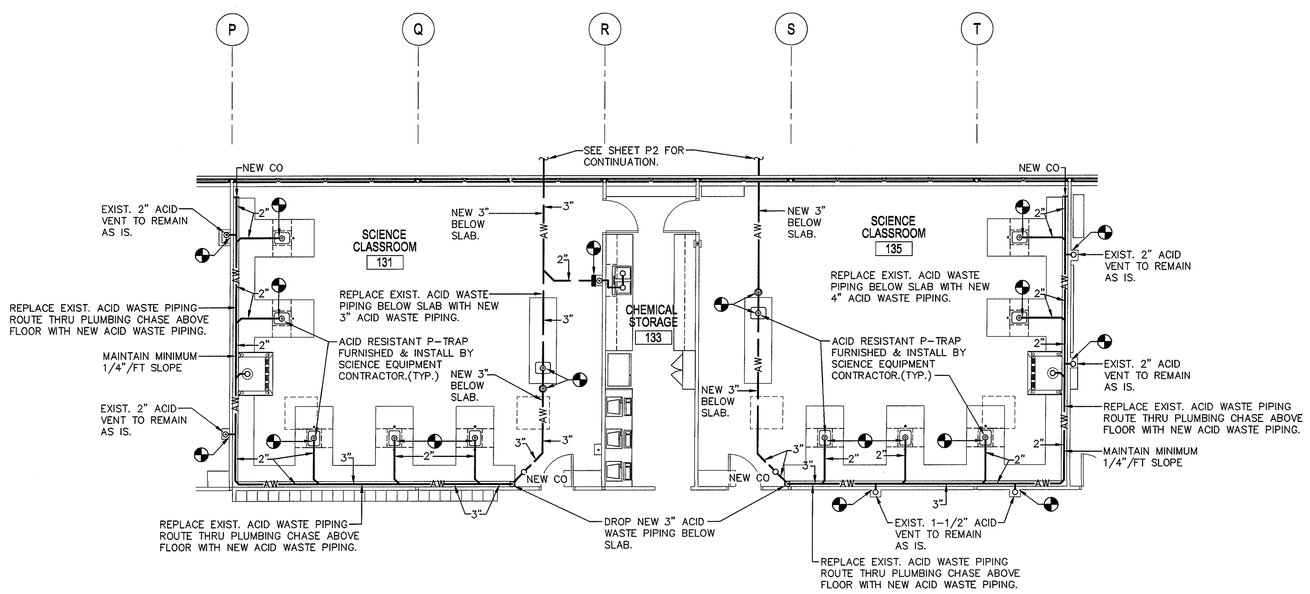

PARTIAL FLOOR PLAN – ADD ALTERNATE NO. P-2 – ACID WASTE & VENT

SCALE: 1/8"=1'-0"

NOTE: SCOPE OF ADD ALTERNATE NO. P-2 IS TO REPLACE ALL EXIST. ACID WASTE PIPING WITH NEW ROUTED IN SAME LOCATION AS EXISTING UTILIZING EXISTING ACID WASTE VENTS.

PLUMBING LEGEND

SYMBOL	DESCRIPTION
SA	SANITARY SEWER ABOVE FLOOR
SA	SANITARY SEWER BELOW FLOOR AND/OR GRADE
ESA	EXISTING SANITARY SEWER PIPING
AW	ACID WASTE PIPING BELOW FLOOR AND/OR GRADE
AV	ACID VENT PIPING
	SANITARY VENT PIPING
	COLD WATER (C.W.)
E	EXISTING WATER LINE
	HOT WATER (H.W)
	EXISTING PIPING TO BE REMOVED OR ABANDONED
	SHUT-OFF VALVE
	EXISTING SHUT-OFF VALVE
	SHUT-OFF VALVE ON RISE OR DROP
CD	CONDENSATE DRAIN
	CHECK VALVE
WCO	WALL CLEANOUT
CO	CLEANOUT
P.D.I. "A"	WATER HAMMER ARRESTOR (RATING NOTED)
V.T.R.	VENT THRU ROOF
A.V.T.R.	ACID VENT THRU ROOF
SAN.	SANITARY SEWER
	POINT AT WHICH NEW CONNECTS TO EXISTING

U.L. SYSTEM NO. CAJ2095
PLASTIC PIPE PENETRATION THROUGH CONCRETE FLOOR/WALL OR BLOCK WALL

F RATING = 2-3 HRS.
T RATING = 2-1/2 HRS.

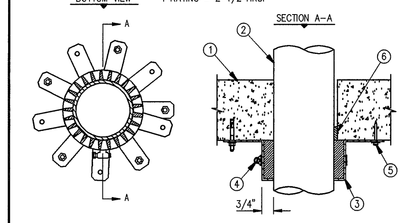

1. FLOOR OR WALL ASSEMBLY :
   A. MIN. 4-1/2" THICK CONCRETE FLOOR/WALL.
   B. ANY U.L. CLASSIFIED CONCRETE BLOCK WALL.
2. 4" DIA. (OR SMALLER) SCHEDULE 40 PVC PIPE (CLOSED OR VENTED).
3. HILTI RETAINING COLLAR COMPLETELY FILLED WITH HILTI FS 611A FIRESTOP SEALANT. MAINTAIN 3/4" SPACE BETWEEN RETAINING COLLAR AND PIPE.
4. HILTI COLLAR CLAMP.
5. ATTACH EVERY OTHER TAB WITH APPROPRIATE FASTENERS. FOR CONCRETE FLOORS AND WALLS USE EITHER 1/4" HILTI KWH-BOLT II OR X-7F PINS 27 WITH STEEL WASHER. FOR CONCRETE BLOCK WALLS, USE HILTI SLEEVE ANCHORS.
6. SEAL ANNULAR SPACE AROUND PIPE TO A MIN. DEPTH OF 1-1/2" WITH HILTI FS 611A FIRESTOP SEALANT.

NOTES : 1. PIPE MAY BE CENTERED OR OFFSET WITHIN HOLE.
2. ANNULAR SPACE = MIN. 0", MAX. 1/2".
3. WALLS REQUIRE COLLARS AND SEALANT ON BOTH SIDES.

SEE HILTI FIRESTOP INSTALLATION MANUAL FOR ADDITIONAL INSTRUCTIONS
HILTI, INC. TULSA, OK 1-800-879-8000

U.L. SYSTEM NO. CAJ5046
INSULATED STEEL PIPE THROUGH CONCRETE FLOOR OR WALL

F RATING = 2-HR.
T RATING = 1-HR.

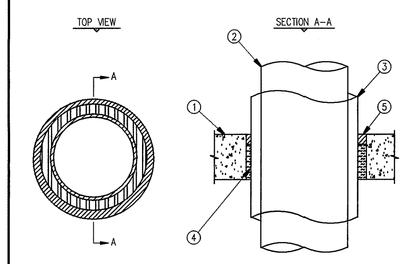

1. FLOOR OR WALL ASSEMBLY :
   A. LIGHTWEIGHT OR NORMAL WEIGHT CONCRETE (MIN. 4-1/2" THICK).
   B. MIN. 8" CONCRETE BLOCK WALL.
2. 8" DIA. (OR SMALLER) STEEL PIPE (SCHEDULE 10 OR HEAVIER).
3. MAX. 1" THICK (MIN. 3.5 PCF) GLASS FIBER INSULATION WITH AN ALL SERVICE JACKET.
4. MIN. 3-1/2" THICKNESS MINERAL WOOL BACKING (MIN. 4 PCF DENSITY).
5. MIN. 1" DEPTH HILTI FS 611A FIRESTOP SEALANT.

NOTES : 1. MAXIMUM DIAMETER OF OPENING = 12".
2. ANNULAR SPACE = MIN. 1/2", MAX. 3/4".
3. WALLS REQUIRE 1" DEPTH OF HILTI FS 611A ON BOTH SIDES.

SEE HILTI FIRESTOP INSTALLATION MANUAL FOR ADDITIONAL INSTRUCTIONS.
HILTI, INC. TULSA, OK 1-800-879-8000

U.L. SYSTEM NO. CAJI149
METAL PIPE THROUGH CONCRETE FLOOR/WALL OR BLOCK WALL

F RATING = 2-HR.
T RATING = 0-HR.

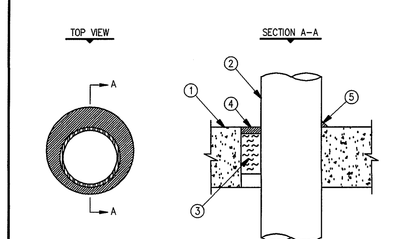

1. A. MIN. 4-1/2" THICK CONCRETE FLOOR.
   B. MIN. 4-1/2" THICK CONCRETE WALL.
   C. ANY U.L. CLASSIFIED CONCRETE BLOCK WALL.
2. 4" DIA. (OR SMALLER) STEEL PIPE, COPPER PIPE, EMT OR CONDUIT.
3. MIN. 3" THICK MINERAL WOOL (MIN. 4 PCF DENSITY) TIGHTLY PACKED.
4. MIN. 1/2" DEPTH HILTI FS 601 FIRESTOP SEALANT.
5. 1/2" BEAD HILTI FS 601 FIRESTOP SEALANT.

NOTES : 1. MAXIMUM DIAMETER OF OPENING = 6".
2. ANNULAR SPACE = MIN. 0" (POINT CONTACT), MAX. 2".
3. WALLS REQUIRE 1/2" OF SEALANT FLUSH WITH BOTH SIDES.

SEE HILTI FIRESTOP INSTALLATION MANUAL FOR ADDITIONAL INSTRUCTIONS
HILTI, INC. TULSA, OK 1-800-879-8000

PLUMBING FIXTURE SPECIFICATIONS

(NUMBERS ARE KOHLER UNLESS NOTED OTHERWISE)

WC1 WATER CLOSET — K-4350, "WELLCOMME LITE" FLOOR MOUNTED SIPHON JET, TOP SPUD, 1.6 GALLON
SEAT — 295C CHURCH OPEN FRONT LESS COVER
FLUSH VALVE — Z-6000-AV-YB-WS1, ZURN LOW CONSUMPTION, 1.6 GALLON

WC2 WATER CLOSET (H.C.) — K-4368, "HIGHCLIFF LITE", FLOOR MOUNTED 17-1/2" HIGH BOWL, SIPHON JET, 1.6 GALLON
SEAT — 295C CHURCH OPEN FRONT LESS COVER
FLUSH VALVE (FLUSH CONTROL SHALL BE NOT HIGHER THAN 44" A.F.F. AND INSTALLED ON WIDE SIDE OF TOILET STALL.) — Z-6000-AV-YB-WS1, ZURN LOW CONSUMPTION, 1.6 GALLON

U1 URINAL — K-4960-ET "BARDON" WALL HUNG, WASHOUT FLUSH, 1.0 GALLON
FLUSH VALVE — Z-6003-AV-YB-WS1 ZURN, LOW CONSUMPTION, 1.0 GALLON
CARRIER — ZURN AS REQUIRED

U2 URINAL (H.C.) — K-5016-ET "DEXTER" WALL HUNG, SIPHON JET 14" EXTENDED LIP, 1.0 GALLON
FLUSH VALVE — Z-6003-AV-YB-WS1, ZURN, LOW CONSUMPTION, 1.0 GALLON
CARRIER — ZURN AS REQUIRED

L1 LAVATORY — K-2849 "HUDSON" ENAMELED CAST IRON, 4" CENTERS
FAUCET — Z-81103, ZURN W/DOMED LEVER HANDLE AND VANDAL RESISTANT
GRID DRAIN — Z-8743, ZURN W/1-1/4" TAILPIECE
SUPPLIES — Z-8800-LR-LK, ZURN W/LOOSE KEY STOPS
P-TRAP — Z-8700, ZURN W/C.O. PLUG
CARRIER — ZURN AS REQUIRED

L2 LAVATORY (H.C.) — K-2849 "HUDSON" ENAMELED CAST IRON, 4" CENTERS
FAUCET — Z-81104, ZURN W/4" WRIST BLADE HANDLES AND VANDAL RESISTANT
GRID DRAIN — Z-8743, ZURN W/1-1/4" TAILPIECE
SUPPLIES — Z-8800-LR-LK, ZURN W/LOOSE KEY STOPS
P-TRAP — Z-8700, ZURN W/C.O. PLUG
CARRIER — ZURN AS REQUIRED
CONTRACTOR SHALL INSULATE P-TRAP AND HOT WATER SUPPLY W/BROCAR KIT 500R TRAP WRAP.

L3 LAVATORY — K-2849 "HUDSON" ENAMELED CAST IRON, 4" CENTERS
FAUCET — Z-86300-CP4, ZURN SELFING CLOSING SINGLE SERVICE W/ 4" COVER PLATE
GRID DRAIN — Z-8743, ZURN W/1-1/4" TAILPIECE
SUPPLY — Z-8800-LR-LK, ZURN W/LOOSE KEY STOP
P-TRAP — Z-8700, ZURN W/C.O. PLUG
CARRIER — ZURN AS REQUIRED

L4 LAVATORY (H.C.) — K-2849 "HUDSON" ENAMELED CAST IRON, 4" CENTERS
FAUCET — Z-86300-CP4, ZURN SELFING CLOSING SINGLE SERVICE W/ 4" COVER PLATE
GRID DRAIN — Z-8743, ZURN W/1-1/4" TAILPIECE
SUPPLY — Z-8800-LR-LK, ZURN W/LOOSE KEY STOP
P-TRAP — Z-8700, ZURN W/C.O. PLUG
CARRIER — ZURN AS REQUIRED
CONTRACTOR SHALL INSULATE P-TRAP AND COLD WATER SUPPLY W/BROCAR KIT 500R TRAP WRAP.

S1 SINK — EXISTING SINK TO REMAIN
FAUCET — Z-871C4, ZURN W/GOOSENECK, WRIST BLADES
STRAINER — Z-8741, ZURN
SUPPLIES — Z-8800-LR, ZURN W/WHEEL HANDLE STOPS
P-TRAP — Z-8700, ZURN W/C.O. PLUG

S2 SINK — LR-1918 ELKAY, 19" X 18" X 7-1/2" DEEP, 18 GA. STAINLESS STEEL, SINGLE BOWL, 3 HOLE
FAUCET — Z-871C4, ZURN W/GOOSENECK, WRIST BLADES
STRAINER — Z-8741, ZURN
SUPPLIES — Z-8800-LR, ZURN W/WHEEL HANDLE STOPS
P-TRAP — Z-8702, ZURN W/C.O. PLUG

S3 SINK (H.C.) — GECR-3321, ELKAY, 33" X 21-1/4" X 5-3/8" DEEP, 18 GA. STAINLESS STEEL, SINGLE BOWL, 3 HOLE
FAUCET — Z-871C4, ZURN W/GOOSENECK, WRIST BLADES
STRAINER — Z-8741, ZURN
SUPPLIES — Z-8800-LR, ZURN W/WHEEL HANDLE STOPS
P-TRAP — Z-8702, ZURN W/C.O. PLUG
CONTRACTOR SHALL INSULATE P-TRAP AND HOT/COLD WATER SUPPLIES W/BROCAR KIT 500R TRAP WRAP.

SS1 SERVICE BASIN — SB-802 STERN WILLIAMS, 24" X 24" X 12", (2) TILING FLANGES
FAUCET — Z-841M1-RC-WHK, ZURN W/VACUUM BREAKER AND INTEGRAL STOP ARMS, PAIL HOOK
HOSE & WALL BRACKET — T-35, STERN WILLIAMS, 36" LONG HOSE AND STAINLESS STEEL WALL BRACKET

EWC1 ELECT. WATER COOLER (H.C.) — EZS-8, ELKAY WALL HUNG, WHEEL CHAIR ACCESSIBLE, ALL STAINLESS STEEL FINISH
SUPPLY — Z-8800-LR, ZURN W/WHEEL HANDLE STOP
P-TRAP — Z-8700, ZURN W/C.O. PLUG
CARRIER — ZURN AS REQUIRED

WH1 WALL HYDRANT — 65, WOODFORD, FREEZELESS, LOOSE KEY TYPE

HB1 HOSE BIBB — 24P-1/2, WOODFORD W/VACUUM BREAKER, WHEEL HANDLE

HB2 HOSE BIBB — 24P-1/2, WOODFORD W/VACUUM BREAKER, LOOSE KEY

FD1 FLOOR DRAIN — ZN-415, ZURN W/TYPE "B" STRAINER, 5" TOP

FD2 FLOOR DRAIN — Z-610-P, ZURN W/12" HEAVY-DUTY TOP, SEDIMENT BUCKET AND TRAP PRIMER CONNECTION.

TP1 TRAP PRIMER — PRECISION PLUMBING PRODUCT INC. PR-500 FOR (1) DRAIN

MV1 MIXING VALVE — 5-130, SYMMONS "THERMIXER" THERMOSTATIC MIXING VALVE

MV2 MIXING VALVE — 5-140, SYMMONS "THERMIXER" THERMOSTATIC MIXING VALVE

FIXTURE CONNECTION SCHEDULE

FIXTURE NO.	DESCRIPTION	H.W.	C.W.	WASTE
WC1	WATER CLOSET	—	1"	4"
WC2	WATER CLOSET (H.C.)	—	1"	4"
U1	URINAL	—	—	2"
U2	URINAL (H.C.)	—	—	2"
L1	LAVATORY	1/2"	1/2"	1-1/4"
L2	LAVATORY (H.C.)	1/2"	1/2"	1-1/4"
L3	LAVATORY	—	1/2"	1-1/4"
L4	LAVATORY (H.C.)	—	1/2"	1-1/4"
S1	SINK	1/2"	1/2"	1-1/2"
S2	SINK	1/2"	1/2"	1-1/2"
S3	SINK (H.C.)	1/2"	1/2"	1-1/2"
SS1	SERVICE SINK	1/2"	1/2"	3"
EWC1	ELECT. WATER COOLER (H.C.)	—	1/2"	1-1/2"
WH1	WALL HYDRANT	—	3/4"	—
HB1	HOSE BIBB	—	1/2"	—
HB2	HOSE BIBB	—	1/2"	—
FD1	FLOOR DRAIN	—	—	3"
FD2	FLOOR DRAIN	—	—	4"
TP1	TRAP PRIMER	—	1/2"	—
TP2	TRAP PRIMER	—	1/2"	—
MV1	MIXING VALVE	3/4"	3/4"	—
MV2	MIXING VALVE	1"	1"	—

ANDREWS HIGH SCHOOL
ADDITIONS AND RENOVATIONS
Andrews, North Carolina

NORTH CAROLINA REGISTERED PROFESSIONAL ENGINEER SEAL 026864 JEFFREY R. WHITLOCK

PADGETT & FREEMAN ARCHITECTS, P.A.
ARCHITECTURE PLANNING INTERIORS
30 Choctaw Street Asheville, NC 28801 828-254-1963

Drawing
PLUMBING DETAILS AND SCHEDULES

Date
JANUARY 30, 2004

Sheet
P5

1 Of ?

ESG
ENGINEERING SERVICES GROUP - NORTH CAROLINA, P.C.
CONSULTING ENGINEERS
900 EAST HILL AVE. SUITE 350
KNOXVILLE, TENNESSEE 37915
(888) 522-0393
PROJECT NO. 24147

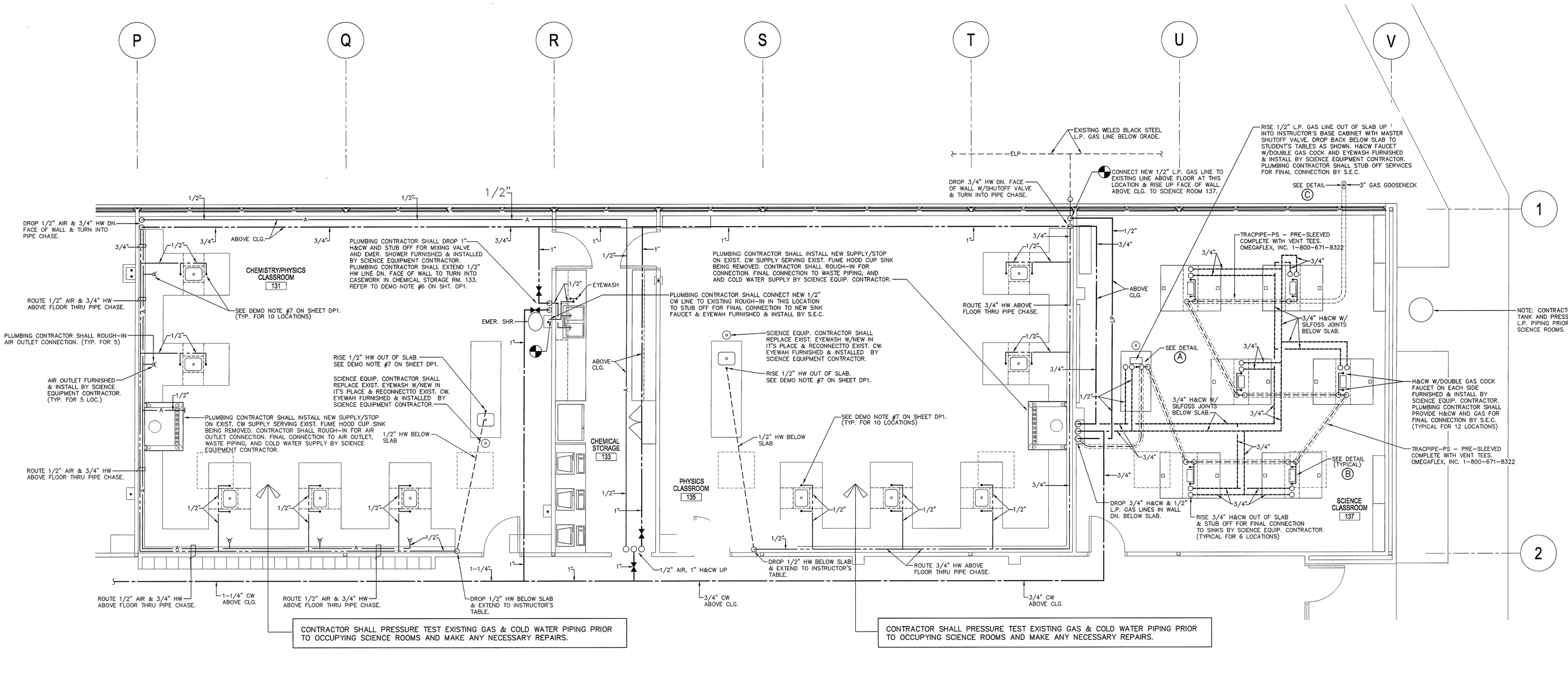

ENLARGED SCIENCE ROOMS FLOOR PLAN – SERVICES

SCALE: 1/4"=1'-0"

LAB NOTES:

1. SINKS, HOT AND COLD WATER FAUCETS W/DOUBLE GAS COCK, EMER. SHOWER W/MIXING VALVE, FUME HOODS, ACID RESISTANT P-TRAPS, AIR OUTLETS, AND EYEWASHES FURNISHED AND INSTALLED BY SCIENCE EQUIPMENT CONTRACTOR.
2. GAS PIPING DROPPING IN WALLS SHALL BE TYPE 'L' COPPER PIPING WITH SOLDER SWEAT FITTINGS.
3. CONTRACTOR'S RESPONSIBILTY TO VENTILATE ALL GAS PIPING IN BLOCK WALLS.
4. ALL ROUGH-INS SHALL BE IN ACCORDANCE WITH MANUFACTURER'S SHOP DWGS.

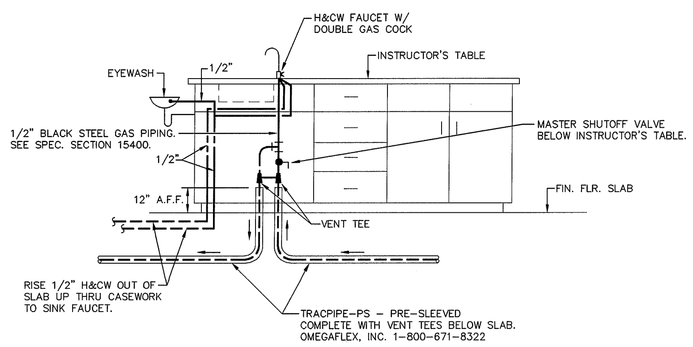

A TYPICAL GAS PIPING TO INSTRUCTOR'S TABLE DETAIL
N.T.S.

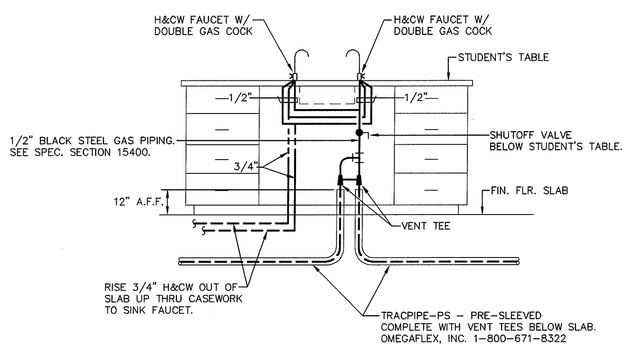

B TYPICAL GAS PIPING TO STUDENT'S TABLE DETAIL
N.T.S.

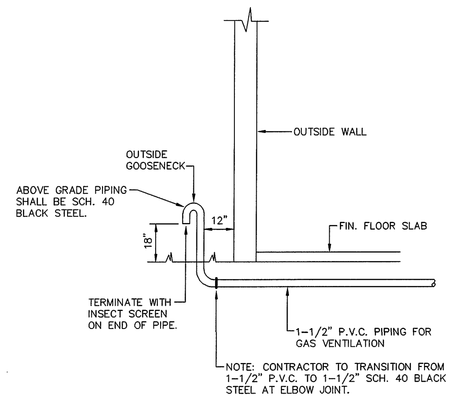

C GAS PIPING GOOSENECK
N.T.S.

ENGINEERING SERVICES GROUP-NORTH CAROLINA, P.C.
CONSULTING ENGINEERS
900 EAST HILL AVE. SUITE 350
KNOXVILLE, TENNESSEE 37915
(865) 522-0393
PROJECT NO. 24147

ANDREWS HIGH SCHOOL
ADDITIONS AND RENOVATIONS
Andrews, North Carolina

NORTH CAROLINA PROFESSIONAL ENGINEER SEAL 13261 JEFFREY R. WHITLOCK

PADGETT & FREEMAN ARCHITECTS, P.A.
ARCHITECTURE PLANNING INTERIORS
30 Choctaw Street Asheville, NC 28801 828-254-1963

Drawing
BUILDING "A" FLOOR PLANS - SERVICES

Date
JANUARY 30, 2004

Sheet
P6

1 Of ?